5. Polyploidy

From PlantBreeding

by Geoffrey Meru; Department of Horticulture, University of Georgia

Contents

- 1 **Classification of Polyploids**
  - 1.1 **Euploidy**
    - 1.1.1 ***Autopolyploidy***
    - 1.1.2 ***Allopolyploidy***
  - 1.2 **Aneuploidy**
- 2 **Mechanisms of Polyploidy Formation**
- 3 **Alterations Associated with Polyploidy**
- 4 **Implications of Ploidy in Plant Breeding**
  - 4.1 **Heterosis in allopolyploids**
  - 4.2 **Inbreeding in polyploids**
  - 4.3 **Effect of polyploidy on inheritance and population genetics**
  - 4.4 **Effect of polyploidy on sterility**
- 5 **Common Applications of Ploidy in Crop Plants**
  - 5.1 **Mutation breeding**
  - 5.2 **Seedless fruits**
  - 5.3 **Bridge crossing**
  - 5.4 **Ornamental and forage breeding**
  - 5.5 **Production of apomictic crops**
  - 5.6 **Disease resistance through aneuploidy**
  - 5.7 **Industrial applications of polyploidy**
- 6 **References**

Polyploids are organisms with multiple sets of chromosomes in excess of the diploid number (Acquaah, 2007; Chen, 2010; Comai, 2005; Ramsey and Schemske, 1998). Polyploidy is common in nature and provides a major mechanism for adaptation and speciation. Approximately 50-70% of angiosperms, which include many crop plants, have undergone polyploidy during their evolutionary process (Chen et al., 2007). Flowering plants form polyploids at a significantly high frequency of 1 in every 100,000 plants (Comai, 2005). Many studies have been carried out to understand the nature of polyploidism. This chapter seeks to illuminate some of these studies and explain the applications and implications of polyploidy in plant breeding and other commercial ventures. To understand polyploidy, a few basic notations need be defined. The basic complete set of chromosomes is designated by “x” while the total number of chromosomes in a somatic cell is designated “2n”. The total number of chromosomes in a somatic cell is twice the haploid number (n) in the gametes (Acquaah, 2007; Otto and Whitton, 2000). The ploidy of some of the major crops in the world is represented in Table 5.1.

Classification of Polyploids

Polyploids may be classified based on their chromosomal composition into either **euploids** or **aneuploids**. Euploids constitute the majority of polyploids.

Euploidy

Euploids are polyploids with multiples of the complete set of chromosomes specific to a species. Depending on the composition of the genome, euploids can be further classified into either **autopolyploids** or **allopolyploids**. Tetraploidy is the most common class of euploids (Comai, 2005).

Table 5.1: A list of major crops and their ploidy

Common name	Ploidy	Name	Propagation
Maize	2x=20	Diploid	Outcrossing
Wheat	6x=42	Hexaploid	Outcrossing
Rice	2x=24	Diploid	Selfing
Potatoes	4x=48	Tetraploid	Outcrossing; Vegetative
Soybeans	2x=40	Diploid	Selfing
Barley	2x=14	Diploid	Selfing
Tomatoes	2x=24	Diploid	Selfing
Bananas	3x=33	Triploid	Vegetative
Watermelon	2x=22	Diploid	Outcrossing
Sugarcane	8x=80	Octoploid	Outcrossing; vegetative
Sugar beet	2x=18	Diploid	Outcrossing
Cassava	2x=36	Diploid	Outcrossing; Vegetative

Autopolyploidy

Autopolyploids are also referred to as autoploids. They contain multiple copies of the basic set (x) of chromosomes of the same genome (Acquaah, 2007; Chen, 2010). Autoploids occur in nature through union of unreduced gametes and at times can be artificially induced (Chen, 2010).

Natural autoploids include tetraploid crops such as alfafa, peanut, potato and coffee and triploid bananas. They occur spontaneously through the process of chromosome doubling. Chromosome doubling in autoploids has varying effect based on the species. Spontaneous chromosome doubling in ornamentals and forage grasses has led to increased vigour. For instance, ornamentals such as tulip and hyacinth, and forage grasses such as ryegrasses have yielded superior varieties following spontaneous chromosome doubling (Acquaah, 2007). Due to the observed advantages in nature, breeders have harnessed the process of chromosome doubling *in vitro* through induced polyploidy to produce superior crops. For example, induced autotetraploids in the watermelon crop are used for the production of seedless triploid hybrids fruits (Fig 5.1) (Wehner, 2008). Such polyploids are induced through the treatment of diploids with mitotic inhibitors such as dinitroaniles and colchicine (Compton et al., 1996). To determine the ploidy status of induced polyploids, several approaches may be used. These include, chloroplast count in guard cells, morphological features such as leaf, flower or pollen size (gigas effect) and flow cytometry (Brummer et al., 1999; Heping et al., 2008).

Allopolyploidy

Allopolyploids are also called alloploids. They are a combination of genomes from different species (Acquaah, 2007). They result from hybridization of two or more genomes followed by chromosome doubling or by the fusion of unreduced gametes between species (Acquaah, 2007; Chen, 2010; Jones et al., 2008; Ramsey and Schemske, 1998). This process is key in the process of speciation for angiosperms and ferns (Chen, 2010) and occurs often in nature. Economically important natural alloploid crops include strawberry, wheat, oat, upland cotton, oilseed rape, blueberry and mustard (Acquaah, 2007; Chen, 2010). To differentiate between the sources of the genomes in an alloploid, each genome is designated by a different letter. For example, the origin of the cultivated mustards (*Brassica spp*) has been well explained by Nagaharu in the triangle of U with each species represented by a distinct letter (Fig 5.2) (Bellostas et al., 2007; Nelson et al., 2009).

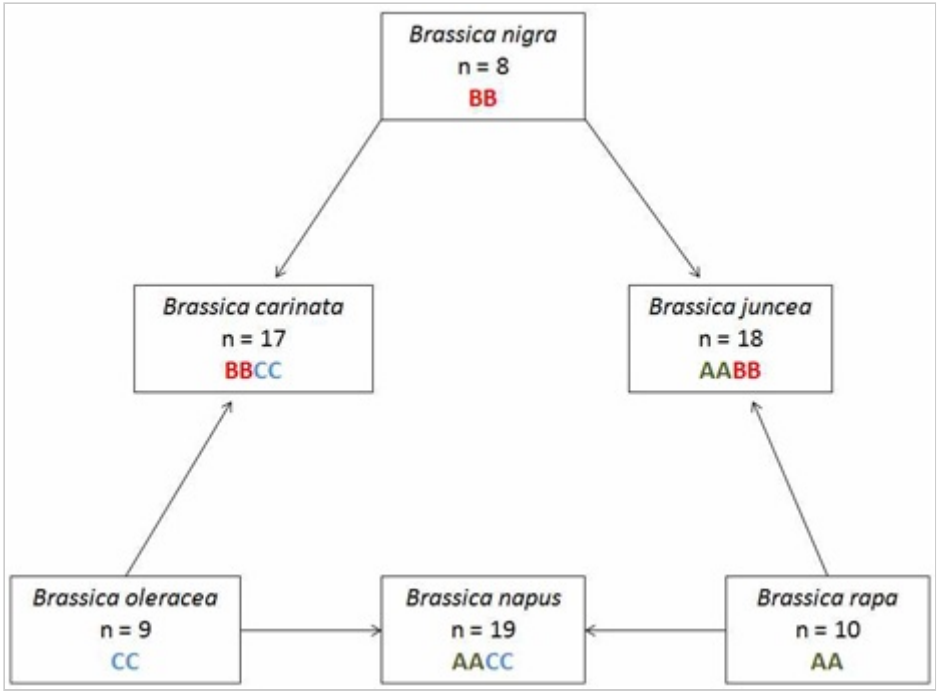

Figure 5.1 Triangle of U showing the origin of cultivated mustard

The hybridized genomes differ in their degree of homology with some being able to pair during mitosis and/or meiosis while others not. When only segments of the chromosomes of the combining genomes differ, the phenomenon is called segmental alloploidy. These chromosomes are similar but not homologous and are called homeologous chromosomes. Such chromosomes indicate ancestral homology (Acquaah, 2007). Induced alloploidy is not common. However, it has been used in some Genus such as *Cucumis* to elucidate the molecular mechanisms involved in diploidization (tendency of polyploids to act as diploids) (Chen et al., 2007). In this study, an allotetraploid was induced by hybridization between *Cucumis sativus* and *Cucumis hystrix* followed by chromosome doubling. Cytogenetic studies were carried out in the following generations to establish the molecular mechanisms involved stabilization of newly formed allopolyploids which include neo-functionalization and sub-functionalization (Chen et al., 2007; Comai, 2005).

Aneuploidy

Aneuploids are polyploids that contain either an addition or subtraction of one or more specific chromosome(s) to the total number of chromosomes that usually make up the ploidy of a species (Acquaah, 2007; Ramsey and Schemske, 1998). Aneuploids result from the formation of univalents and multivalents during meiosis of euploids (Acquaah, 2007). For example, several studies have found that 30-40% of progeny derived from autotetraploid maize are aneuploids (Comai, 2005). With no mechanism of dividing univalents equally among daughter cells during anaphase I, some cells inherit more genetic material than others (Ramsey and Schemske, 1998). Similarly, multivalents such as homologous chromosomes may fail to separate during meiosis leading to unequal migration of chromosomes to opposite poles. This mechanism is called non-disjunction (Acquaah, 2007). These meiotic aberrances result in plants with reduced vigor. Aneuploids are classified according to the number of chromosomes gained or lost as shown in Table 5.2.

Table 5.2: Classification of aneuploids

Term	Chromosome number
Monosomy	2n-1
Nullisomy	2n-2
Trisomy	2n+2
Tetrasomy	2n+2
Pentasomy	2n+3

Mechanisms of Polyploidy Formation

Several cytological mechanisms are known to spontaneously induce polyploidy in plants (Ramsey and Schemske, 1998). One such route involves non-reduction of gametes during meiosis a process called meiotic nuclear restitution. The formed gametes (2n) contain the somatic nuclear condition of cells. Meiotic aberrations related to spindle formation, spindle function and cytokinesis have been implicated in this process (Ramsey and Schemske, 1998). The subsequent union of reduced and non-reduced gametes leads to the formation of polyploids (Acquaah, 2007; Ramsey and Schemske, 1998). For example, autotetraploids may be formed in a diploid population through the union of two unreduced 2n gametes as was found in the F1 progenies of open-pollinated diploid apples (Ramsey and Schemske, 1998). Similarly, spontaneous allotetraploids were formed in 90% of F2 progenies of interspecific crosses between *Digitalis ambigua* and *Digitalis purpurea*, which are common ornamental plants (Ramsey and Schemske, 1998). Another example is the formation of autohexaploid *Beta vulgaris* (sugar beet) and alfalfa from cultivated autotetraploid varieties apparently from the union of reduced (2x) and unreduced (4x) gametes (Bingham, 1968; Hornsey, 1973).

Another major route for polyploid formation is through somatic doubling of chromosomes during mitosis. In nature, the formation of polyploids as a result of mitotic aberrations has been reported in the meristematic tissue of several plant species including tomato and in non-meristematic tissues of plants such as bean (Coleman, 1950; Ramsey and Schemske, 1998). Artificial inducement of polyploids through the inhibition of mitosis is routine in plant breeding. High temperatures above 40°C have been used to induce tetraploid and octoploid corn seedlings albeit with low success of 1.8% and 0.8% respectively (Randolph, 1932). Currently, chemical mitotic inhibitory agents such as colchicine or dinitroanilines are used to induce polyploidy in crop plants. A typical example is the production of tetraploid watermelon plants for the production of seedless triploid watermelon (Compton et al., 1996).

In addition, an uncommon mechanism of polyploid formation involves polyspermy where one egg is fertilized by several male nucleuses as commonly observed in orchids (Ramsey and Schemske, 1998). The major pathways involved in polyploidy formation are represented in Fig 5.3.

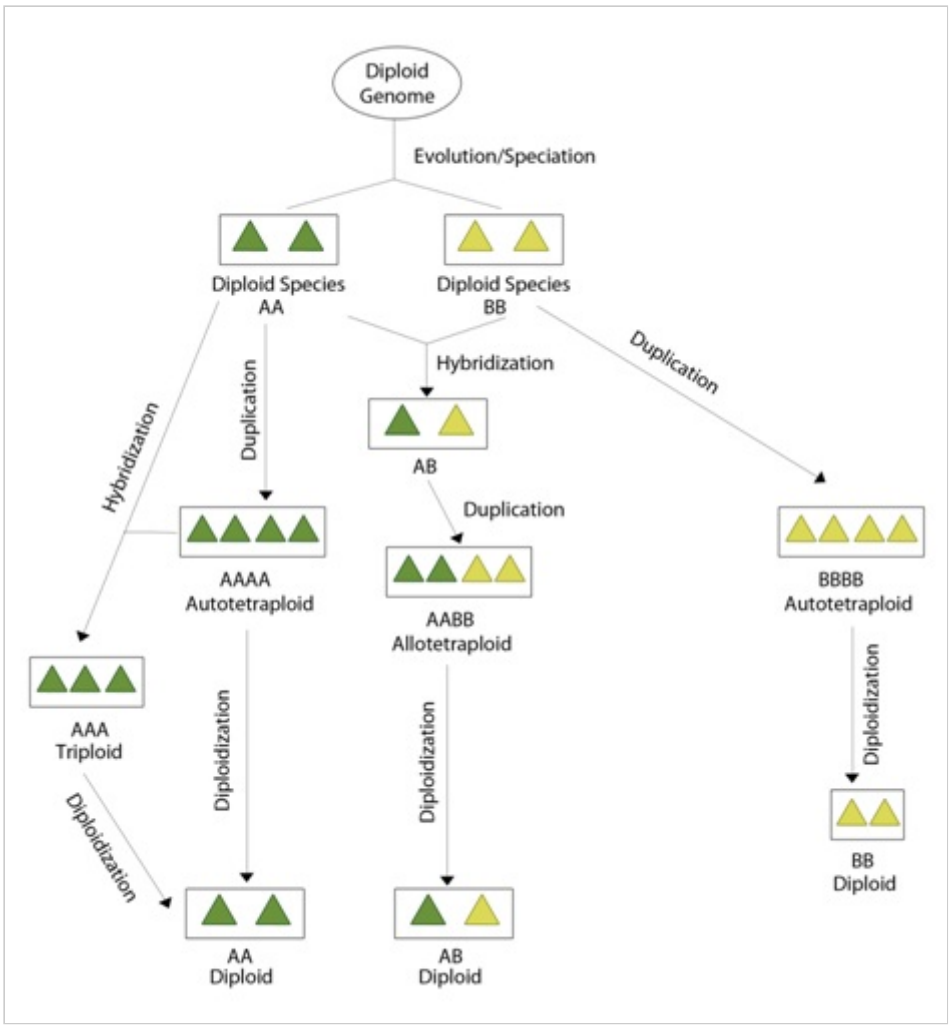

Figure 5.3 Major pathways in the formation of polyploids

Alterations Associated with Polyploidy

Several changes in the plant accompany spontaneous or induced polyploidy. These may be changes in genetic composition, physiological mechanisms, structural composition and vigor. Some of these changes create the platform for the commercial exploitation of polyploids. Genetic changes following genome duplication involve the rapid loss of chromosomal segments in a process called diploidization. Diploidization describes the process by which a polyploid genome become more 'diploid-like' in character (Fig 5.3) (Clarkson et al., 2005; Comai, 2005; Ozkan and Feldman, 2009). It is necessary to eliminate duplicated genes in a newly formed polyploid to avoid gene silencing as well as to stabilize fertility (Chen et al., 2007; Chen, 2010; Clarkson et al., 2005; Comai, 2005). Duplicated genes that are retained often undergo subfunctionalization (complementing genes) and neofunctionalization (genes with novel functions) (Comai, 2005; Osborn et al., 2003). Diploidization has been described for many genus including *Nicotina* and *Cucumis* (Chen et al., 2007; Comai, 2005).

The increase in nuclear ploidy affects the structural and anatomical characteristics of the plant. In general, polyploidy results in increased leaf and flower size (Fig. 5.4), stomatal density, cell size and chloroplast count (Dhawan and Lavania, 1996). These phenomena are collectively referred to as the gigas effect (Acquaah, 2007). Its application in forage and ornamental breeding is described later in this chapter.

Physiological changes are also known to accompany genome duplication. These mainly result from change of metabolism resulting in a general increase in secondary metabolites (Levin, 1983). This property has found application in the breeding of medicinal herbs in the production of pharmaceuticals. Hybrid vigor resulting from interspecific crosses in allopolyploids is one of the most exploited advantages of polyploid in plant breeding. Its application will be described in the next section.

Figure 5.4 A comparison between the leaf and flower of a (A) diploid and (B) induced tetraploid watermelon illustrating the gigas effect.

Implications of Ploidy in Plant Breeding

Heterosis in allopolyploids

Heterosis or hybrid vigor is the difference between the hybrid and the mean of the two parents and is characterized by increased vigor and superior qualitative or quantitative traits (Chen, 2010; Dhawan and Lavania, 1996; Lamkey and Edwards, 1999). Over the last several decades, breeders have increased the world food production by utilizing the concept of heterosis in hybrid cultivars (Kempe and Gils, 2011). For example, following the introduction of hybrid corn (diploid) in the 1920's, there was a six fold increase in corn production between then and 1990 in the U.S (Stuber, 1994). However, unlike diploids which may lose heterosis with each consecutive generation due to segregation, alloploidy and autoploidy imposes pairing of homologous chromosomes, thus preventing intergenomic recombination (Comai, 2005). This concept is called preferential or selective pairing and is the tendency for a doubled set of chromosomes to pair independently of the doubled set of chromosomes of the other species (Acquaah, 2007). In this way, heterozygosity is maintained throughout generations (Acquaah, 2007; Comai, 2005). Generally, the parents used in hybrid formation should be within subspecies or between subspecies. An example of a man-made interspecies allopolyploid hybrid is triticale. It is derived from crossing two cereals, hexaploid bread wheat (*T. aestivum*) and rye (*Secale cereale*). Triticale was developed to combine good qualities of wheat including high yield and grain quality with the hardiness (disease and stress tolerance) of rye (Acquaah, 2007; Chen, 2010; Haesaert and De Baets, 1994; Wolski and Pojmaj, 1994).

The process of hybrid formation for polyploids is not without setbacks. Many interspecific hybrids have low fertility and viability due to hybrid incompatibilities (Chen, 2010; Orr, 1996). Hybrid incompatibility results from genes that are functionally diverged in the respective hybrid forming species. This may lead to silencing of protein encoding genes and has been reported in interspecific hybrids of *Arabidopsis* (Chen, 2010). To increase the heterosis, fertility and viability of interspecific hybrids, several factors should be considered. The parents used should be of diverse genetic background and preferably heterozygous (Acquaah, 2007; Chen, 2010).

Inbreeding in polyploids

Self pollination is an important method for attaining homozygosity in breeding. Through this process, it is possible to fix desired alleles in the background of a crop. In general, it takes approximately 3.80 more generations for an autotetraploid to reach the same level of homozygosity as the diploid (Dudley, 1963). Fixing a trait controlled by a single gene in an autotetraploid, would require four identical alleles to achieve homozygosity. For example, in a segregating, tetraploid F2 population the proportion of the homozygous loci would be 1:18 (Fig 5.5).

Effect of polyploidy on inheritance and population genetics

An immediate consequence of polyploidy is the change in gametic and filial frequencies (Comai, 2005). This is because polyploids have multiple alleles associated with a single locus. For example, a hexaploid has six alleles per locus while a tetraploid has four. The genetics of polyploids is often complicated by multi-allelism at loci thus altering segregation ratios and inheritance patterns expected in diploids. Provided a polyploid species behaves like a diploid at meiosis through normal bivalent pairing (disomic inheritance), such as in wheat or tobacco, normal biometric analysis of inheritance apply (Kearsey and Pooni, 1998). However, several autotetraploid crop plants including potatoes, coffee and lucerne and some forage grasses have tetrasomic inheritance (Killick, 1971). With this knowledge, it is necessary to make accommodations in population structure and breeding strategy to account for differences in gamete structure (Katepa-Mupondwa et al., 2002). For example, breeding schemes that maximize heterozygosity are frequently used for the autotetraploid alfalfa in an attempt to utilize multi-allelic interactions (Katepa-Mupondwa et al., 2002). Altered genotypic ratios are apparent in polyploids when compared with diploids. For example an arbitrary locus with B (dominant) and b (recessive) alleles, following selfing, an autotetraploid (*BBbb*) would produce 5 possible genotypes while a diploid (*Bb*) would generate 3 possible genotypes (Fig 5.5) (Acquaah, 2007; Killick, 1971). Distinguishing a quadruplex (*BBBB*) from a triplex (*BBBb*) in the segregating population using a progeny test presents difficulty in breeding because both would breed true to the dominant allele. An extra generation would be required to identify the triplex by observing the formation of duplex plants (Acquaah, 2007).

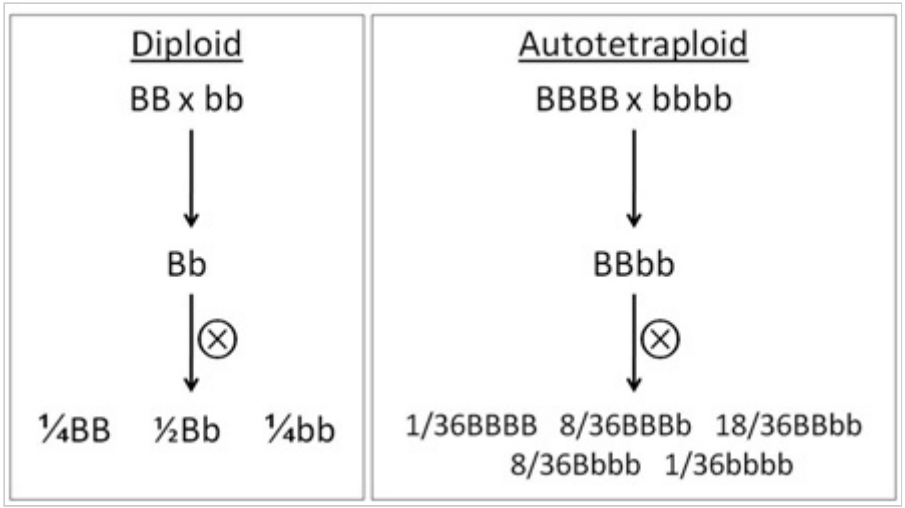

Fig 5.5 Genotypes and ratios formed following selfing of a heterozygous diploid and autotetraploid.

Effect of polyploidy on sterility

Since autoploids contain more than two homologous chromosomes, meiosis results in the formation of univalents and multivalent, unlike in diploids where bivalents are usually formed (Acquaah, 2007). For instance during meiosis, autotetraploids may form bivalents, quadrivalents and univalents (Fig 5.6). The ratio of these

gametes following meiosis determines the fertility of a polyploid individual. Univalents and trivalents result in non-functional sterile gametes and are the most common in triploids, making them sterile.

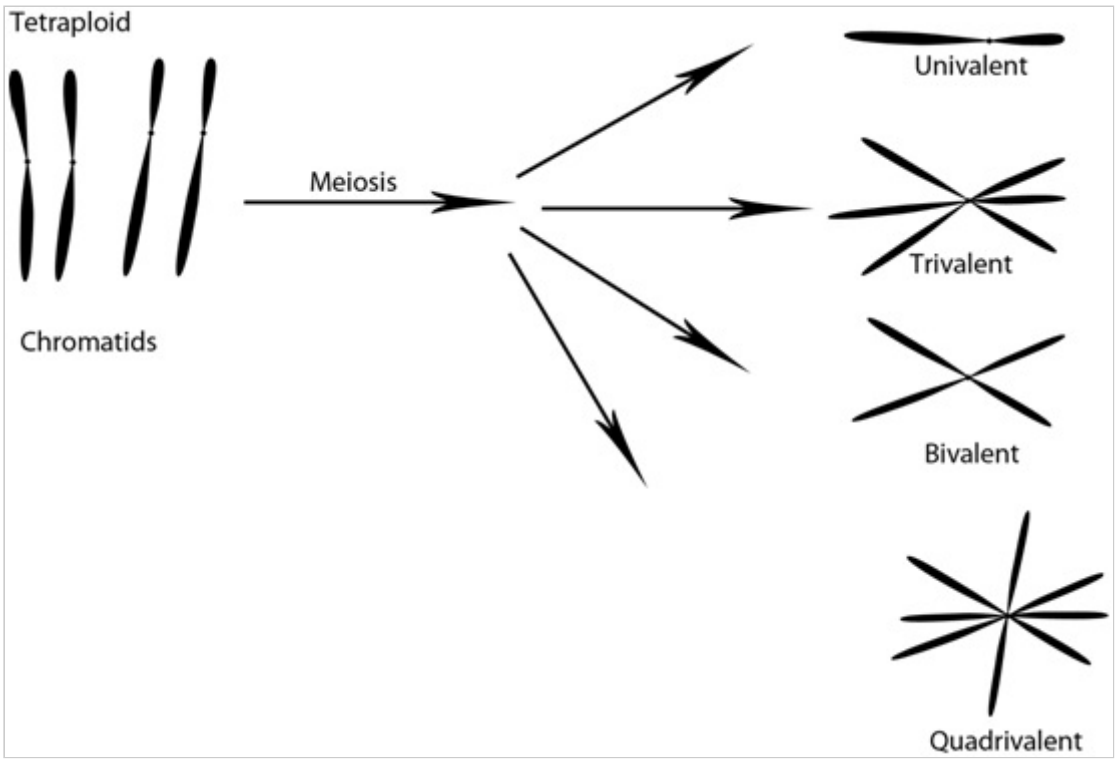

Figure 5.6 Gamete formation in autotetraploids. Trivalents and univalents result in sterile gametes while bivalents and quadrivalents result in fertile gametes.

Rigorous and effective selection strategies for fertile autoploids are practiced in the development of inbred lines. Breeders rogue out autoploids with low seed set as well as those with morphological abnormalities (Andrus et al., 1971). Sterile alloploids arise from the pairing of homeologous chromosomes from separate genomes during meiosis instead of homologous chromosome (Chen et al., 2007; Levi et al., 2002). This results in non-functional gametes. A viable allopolyploid requires a diploid-like meiosis behavior to establish disomic inheritance and full fertility. Fertility problems in allopolyploids also occur when crossing crops of different ploidy levels as a result of formation of multivalents. To improve fertility, breeders use the parent with the lowest chromosome number as the female parent so as to increase seed set (Olmo, 1952).

Common Applications of Ploidy in Crop Plants

Mutation breeding

High frequencies of chromosome mutations are desirable in modern breeding techniques, such as tilling, as they provide new sources of variation. The multiallelic nature of loci in polyploids has many advantages that are useful in breeding. The masking of deleterious alleles, that may arise from induced mutation, by their dominant forms cushions polyploids from lethal conditions often associated with inbred diploid crops (Gaul, 1958). This concept has been instrumental in the evolution of polyploids during bottlenecks where there is enforced inbreeding (Comai, 2005). Mutation breeding exploits the concept of gene redundancy and mutation tolerance in polyploid crop improvement in two ways. First, polyploids are able to tolerate deleterious allele modifications post-mutation, and secondly, they have increased mutation frequency because of their large genomes resulting from duplicated condition of their genes (Gaul, 1958). The high mutation frequencies observed with polyploids may be exploited when trying to induce mutations in diploid cultivars that do not produce enough genetic variation after a mutagenic treatment. This approach has been used in mutation

breeding of *Achimenes sp.* (nut orchids) by first forming autotetraploids through colchicine treatment followed by the application of fast neutrons and X-rays. In this study, the autotetraploids were found to have 20-40 times higher mutation frequency than the corresponding diploid cultivar due to the large genome (Broertjes, 1976).

Seedless fruits

The seedless trait of triploids has been desirable especially in fruits. Commercial use of triploid fruits can be found in crops such as watermelons and are produced artificially by first developing tetraploids which are then crossed with diploid watermelon. In order to set fruit, the triploid watermelon is crossed with a desirable diploid pollen donor.

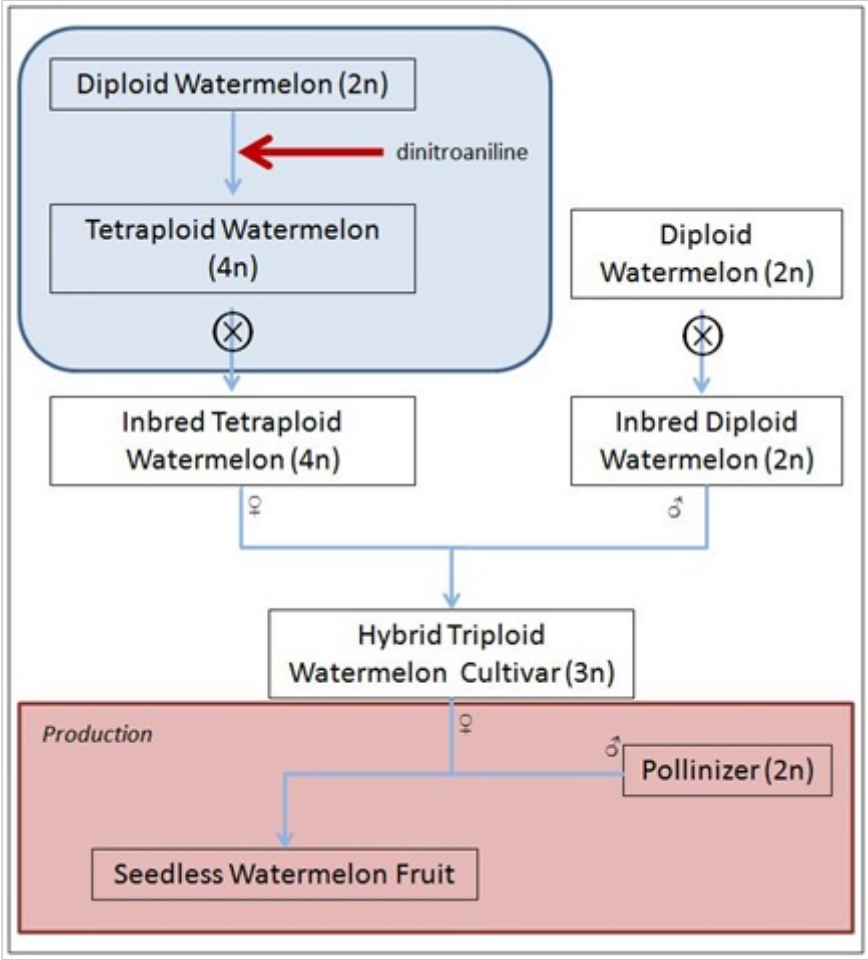

Figure 5.1 A flow diagram showing the production of seedless triploid watermelon

Bridge crossing

Another breeding strategy that utilizes the reproductive superiority of polyploids is bridge crossing. When sexual incompatibilities between two species are due to ploidy levels, transitional crosses can be carried out followed by chromosome doubling to produce fertile bridge hybrids. This method has been used to breed for superior tall fescue grass (*F. arundinacea*) from Italian ryegrass (2n=2x=14) and tall fescue (2n=6x=42) by using meadow grass (*Fescue pratensis*) as a bridge species (Fig.5.7) (Acquaah, 2007). The same principle has been applied in fixing heterozygosity in hybrids by doubling the chromosomes in the superior progeny (Comai, 2005).

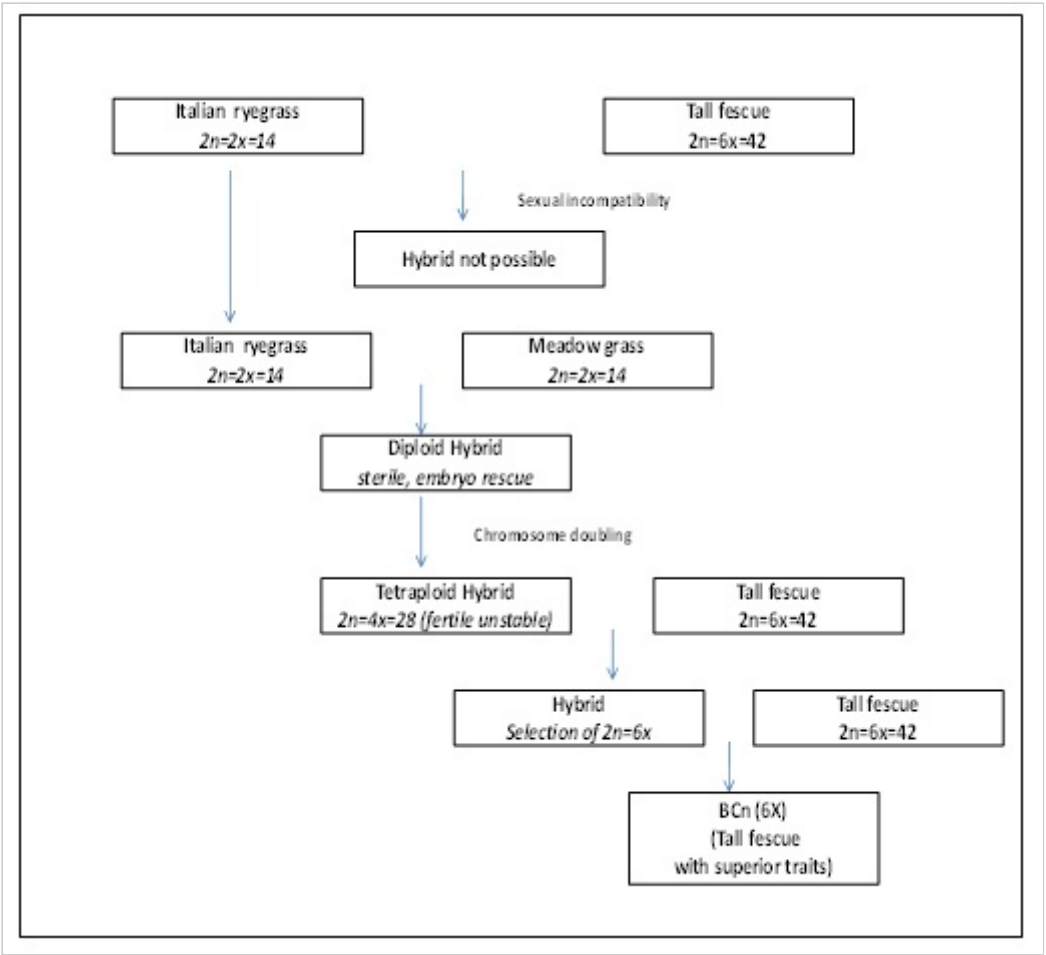

Figure 5.7 The development of superior tall fescue grass through bridge crossing and induced tetraploidy.

Ornamental and forage breeding

One of the immediate and obvious consequences of polyploidy in plants is an increase in cell size which in turn leads to enlarged plant organs, a phenomenon termed gigas effect (Fig 5.4) (Acquaah, 2007; Levin, 1983; Stebbins, 1971). For example, the volume of tetraploid cells usually is about twice that of their diploid progenitors (Acquaah, 2007; Emsweller and Ruttle, 1941; Levin, 1983; Schepper et al., 2001). The increase in cell volume however is mainly attributed to increased water and not biomass. Therefore, its application is limited for breeding agronomically important crops such as cereals. Although chromosome doubling may result in significantly larger seeds and increased seed-protein content in cereal crops, this advantage is offset by low seed set (Dhawan and Lavania, 1996). In contrast, the gigas effect has been explored in tree, ornamental, forage crop and fruit breeding (Emsweller and Ruttle, 1941; Schepper et al., 2001). For example, through induced polyploidy, breeders have developed Bouschet tetraploid grapes with more yield and juice content than the diploid progenitor Alicante (Olmo, 1952). Ornamental crops such as snapdragons and marigolds have been bred through chromosome doubling to improve the quality and size of their blossoms (Emsweller and Ruttle, 1941). A strong inverse correlation between DNA content and development rates in plants has been reported by several authors (Levin, 1983; Smith and Bennett, 1975). It has been attributed to lower auxin levels, reduced surface to volume ratio and altered nuclear surface to cell volume ratio (Acquaah, 2007; Levin, 1983). The slower growth rate of polyploids allows them to flower later and for a longer period of time than their diploid progenitors (Levin, 1983). This quality may be of interest especially in ornamental breeding.

Production of apomictic crops

Apomixis provides another avenue for use of polyploids in breeding. Apomixis provides an avenue for the production of seeds asexually through parthenogenesis. Most apomictic plants are polyploid but most polyploid plants are not apomictic (Otto and Whitton, 2000). In plants capable of both sexual and asexual reproduction, polyploidy promotes the latter (Dhawan and Lavania, 1996; Levin, 1983). Obligate apomicts are the most desired of hybrids but little gain has been realized towards their development. However, it has been suggested that obligate apomicts may be induced through development of very high ploidy plants (Levin, 1983). An example of an obligate apomict achieved at high ploidy level is the octoploid of the grass, *Themeda triandra* (Levin, 1983).

Disease resistance through aneuploidy

Aneuploidy has been applied in breeding to develop disease resistant plants through the addition of an extra chromosome into the progeny genome. An example is the transfer of leaf rust resistance to *Tricum aestivum* from *Aegilops umbellulata* through backcrossing. In addition, other breeding strategies utilizing aneuploidy have been explored including chromosome deletion, chromosome substitution and supernumerary chromosomes (Acquaah, 2007).

Industrial applications of polyploidy

Chromosome doubling is reported to have an apparent effect on many physiological properties of a plant. The most discernable of these has been the increase in secondary as well as primary metabolism (Levin, 1983). The resulting increase in secondary metabolites, in some cases by 100%, after chromosome doubling has been widely exploited in the breeding of narcotic plants such as *Cannabis, Datura* and *Atropa* (De Jesus-Gonzalez and Weathers, 2003; Dhawan and Lavania, 1996; Levin, 1983). *In vitro* secondary metabolite production systems that exploit polyploidism have also been developed. The production of the antimalarial sesquiterpene artemisinin has been enhanced six fold by inducing tetraploids of the wild diploid *Artemisia annua* L. (clone YUT16) (De Jesus-Gonzalez and Weathers, 2003). In addition, commercial synthesis of sex hormones and corticosteroids has been improved significantly by artificial induction of tetraploids from diploid *Dioscorea zingiberensis*, native to China (Heping et al., 2008). Attempts have been made to improve the production of pyrethrin, a botanical insecticide, by chromosome doubling of *Chrysanthemum cinerariifolium* (Liu and Gao, 2007). Other plants whose production of terpenes has increased following artificial chromosome doubling include *Carum cari, Ocimum kilmandscharicum* and *Mentha arvensis* (Bose and Choudhury, 1962; Levin, 1983). The enhanced production of secondary metabolites such as alkaloids and terpenes in polyploids may concurrently offer resistance to pests and pathogens. Experiments with diploid *Glycine tabacina*, a forage legume, and its tetraploid forms to measure resistance to leaf rust, *Phakopsora pachyrhizi*, established that 42% of the tetraploid plants were resistant compared to 14% of the diploid plants (Levin, 1983). Similar results were observed while comparing resistance to insects and the clover eel nematode between *Trifolium pratense* (red clover) tetraploids and diploids (Mehta and Swaminathan, 1957).

References

Acquaah G. (2007) Principles of plant genetics and breeding Wiley-Blackwell, Malden.

Andrus C., Seshadri V., Grimball P. (1971) Production of seedless watermelons US Agricultural Research Service, USDA, Washington D.C.

Bellostas N., Sørensen J.C., Sørensen H. (2007) Profiling glucosinolates in vegetative and reproductive tissues of four Brassica species of the U triangle for their biofumigation potential. Journal of the Science of Food and Agriculture 87:1586-1594.

Bingham E. (1968) Aneuploids in Seedling Populations of Tetraploid Alfalfa, Medicago sativa L. 1. Crop science 8:571.

Bose R., Choudhury J. (1962) A comparative study of the cytotaxonomy, palynology, physiology of diploid plants from Ocimum kilimandscharicum Guerke and their yield of raw material and volatile contents. Caryologia 15:435-453.

Broertjes C. (1976) Mutation breeding of autotetraploid Achimenes cultivars. Euphytica 25:297-304.

Brummer E.C., M. P., D L. (1999) Ploidy determination of alfalfa germplasm accessions using flow cytometry. Crop science 39.

Chen L., Lou Q., Zhuang Y., Chen J., Zhang X., Wolukau J.N. (2007) Cytological diploidization and rapid genome changes of the newly synthesized allotetraploids Cucumis× hytivus. Planta 225:603-614.

Chen Z. (2010) Molecular mechanisms of polyploidy and hybrid vigor. Trends in plant science 15:57-71.

Clarkson J.J., Lim K.Y., Kovarik A., Chase M.W., Knapp S., Leitch A.R. (2005) Long term genome diploidization in allopolyploid Nicotiana section Repandae (Solanaceae). New phytologist 168:241-252.

Coleman L. (1950) Nuclear conditions in normal stem tissue of Vicia Faba. Canadian Journal of Research 28:382-91.

Comai L. (2005) The advantages and disadvantages of being polyploid. Nature Reviews Genetics 6:836-846.

Compton M., Gray D., Elmstrom G. (1996) Identification of tetraploid regenerants from cotyledons of diploid watermelon cultured in vitro. Euphytica 87:165-172.

De Jesus-Gonzalez L., Weathers P. (2003) Tetraploid Artemisia annua hairy roots produce more artemisinin than diploids. Plant cell reports 21:809-813.

Dhawan O., Lavania U. (1996) Enhancing the productivity of secondary metabolites via induced polyploidy: a review. Euphytica 87:81-89.

Dudley, J.W. (1963) Basic problems in quantitative genetics of autotetraploids. p. 519- 520 In W.D. Hanson and H.F. Robinson. (ed.) Statistical genetics and plant breeding: a symposium and workshop sponsored by the committee of plant breeding and genetics of the agricultural board at the North Carolina state college, Raleigh, N.C. National academy of science, Washington D.C.

Emsweller S., Ruttle M. (1941) Induced polyploidy in floriculture. American Naturalist:310-328.

Gaul H. (1958) Present aspects of induced mutations in plant breeding. Euphytica 7:275-289.

Heping H., Shanlin G., Lanlan C., Xiaoke J. (2008) In vitro induction and identification of autotetraploids of Dioscorea zingiberensis. In Vitro Cellular & Developmental Biology-Plant 44:448-455.

Hornsey K. (1973) The occurrence of hexaploid plants among autotetraploid populations of sugar beet (Beta vulgaris L.), and the production of tetraploid progeny using a diploid pollinator. Caryologia 26:225-228.

Jones J.R., Ranney T.G., Eaker T.A. (2008) A novel method for inducing polyploidy in Rhododendron seedlings. J. Amer. Rhododendron Soc 62:130-135.

Katepa-Mupondwa F.M., Christie B.R., Michaels T.E. (2002) An improved breeding strategy for autotetraploid alfalfa (Medicago sativa L.). Euphytica 123:139-146.

Kearsey M.J., Pooni H.S. (1998) The genetical analysis of quantitative traits Stanley Thornes (Publishers) Ltd.

Kempe K., Gils M. (2011) Pollination control technologies for hybrid breeding. Molecular Breeding 27:417-437. DOI: 10.1007/s11032-011-9555-0.

Killick R. (1971) The biometrical genetics of autotetraploids. 1. Generations derived from a cross between two pure lines. Heredity 27:331-346.

Lamkey K., Edwards J. (1999) Quantitative genetics of heterosis. The genetics and exploitation of heterosis in crops:31–48.

Levi A., Thomas C., Joobeur T., Zhang X., Davis A. (2002) A genetic linkage map for watermelon derived from a testcross population:(Citrullus lanatus var. citroides× C. lanatus Levin D. (1983) Polyploidy and novelty in flowering plants. American Naturalist 122:1-25.

Liu Z., Gao S. (2007) Micropropagation and induction of autotetraploid plants of Chrysanthemum cinerariifolium (Trev.) Vis. In Vitro Cellular & Developmental Biology-Plant 43:404-408.

Mehta R., Swaminathan M. (1957) Studies on induced polyploids in forage crops. 1. Survey of previous work. Ind. J. Genet. PL Breed 17:27-57.

Nelson M.N., Mason A.S., Castello M.C., Thomson L., Yan G., Cowling W.A. (2009) Microspore culture preferentially selects unreduced (2n) gametes from an interspecific hybrid of Brassica napus L.× Brassica carinata Braun. TAG Theoretical and Applied Genetics 119:497-505.

Olmo H. (1952) Breeding tetraploid grapes. American society for Horticultural Science 59:285-290.

Orr H. (1996) Dobzhansky, Bateson, and the genetics of speciation. Genetics 144:1331.

Osborn T.C., Chris Pires J., Birchler J.A., Auger D.L., Jeffery Chen Z., Lee H.S., Comai L., Madlung A., Doerge R., Colot V. (2003) Understanding mechanisms of novel gene expression in polyploids. Trends in Genetics 19:141-147.

Otto S.P., Whitton J. (2000) Polyploid incidence and evolution. Annual Review of Genetics 34:401-437.

Ozkan H., Feldman M. (2009) Rapid cytological diploidization in newly formed allopolyploids of the wheat (Aegilops-Triticum) group. Genome 52:926-934.

Ramsey J., Schemske D.W. (1998) Pathways, mechanisms, and rates of polyploid formation in flowering plants. Annual Review of Ecology and Systematics 29:467-501.

Randolph L. (1932) Some effects of high temperature on polyploidy and other variations in maize. Proceedings of the National Academy of Sciences of the United States of America 18:222.

Schepper S., Leus L., Mertens M., Debergh P., Bockstaele E., Loose M. (2001) Somatic polyploidy and its consequences for flower coloration and flower morphology in azalea. Plant cell reports 20:583-590.

Wehner T.C. (2008) Watermelon. Springer Science, New York.

Retrieved from "http://plantbreeding.coe.uga.edu/index.php?title=5._Polyploidy&oldid=1891"

- This page was last modified on 15 May 2013, at 23:51.
- Content is available under Creative Commons Attribution-Noncommercial-Share Alike 3.0 License unless otherwise noted.